Blinking LED Oscillator Circuit with Transistor Feedback

This project demonstrates a simple astable multivibrator oscillator circuit that causes an LED to blink. It uses two NPN transistors (2N4401), capacitors (C1 and C2), and resistors (R1, R2, R3, R4) to generate the alternating current that powers the LED. The circuit relies on feedback between the two transistors, where the capacitors charge and discharge, triggering the transistors to turn on and off in sequence. The LEDs (D1 and D2) alternate between glowing, creating a blinking effect. This setup is ideal for understanding basic transistor switching, timing circuits, and feedback loops.

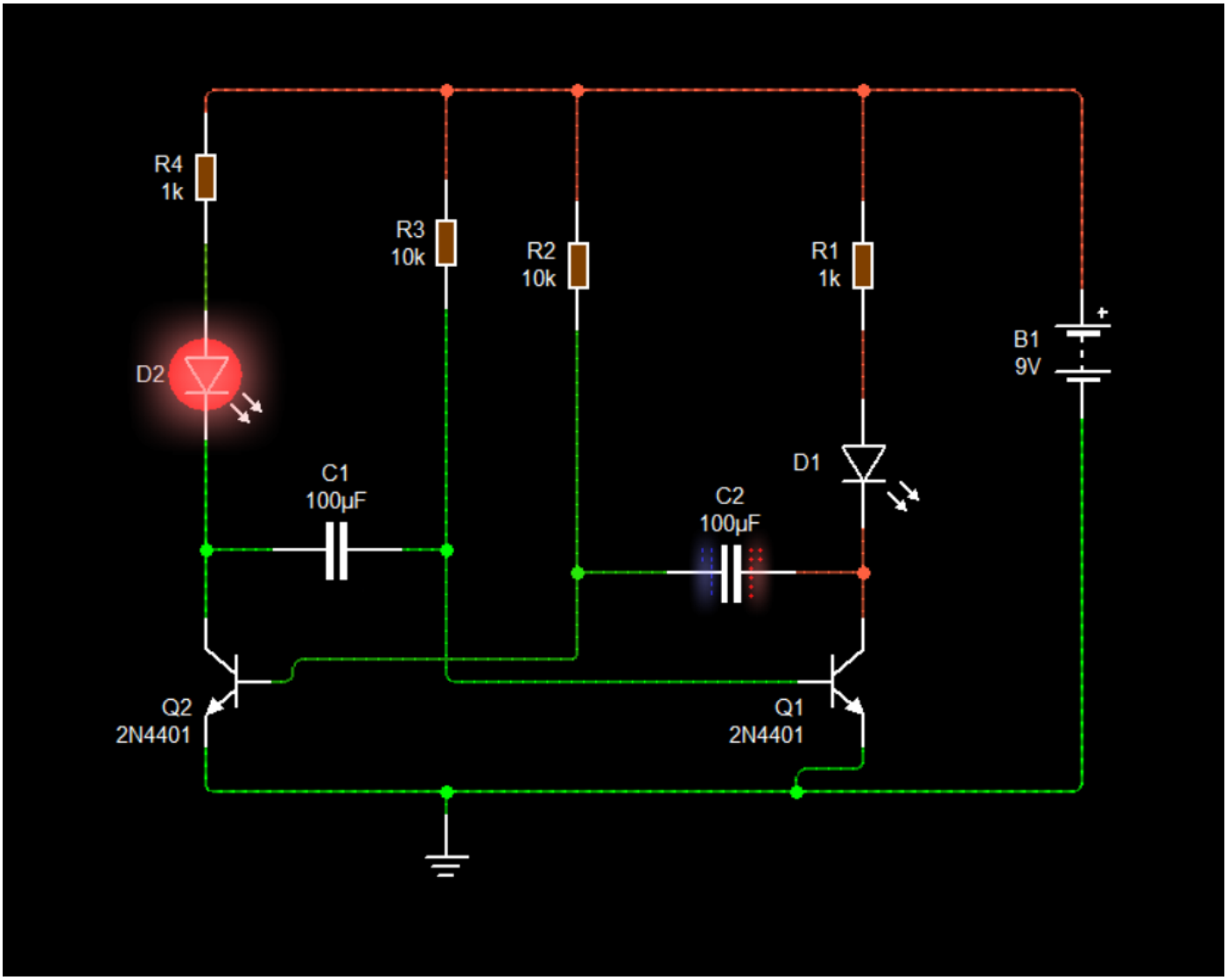

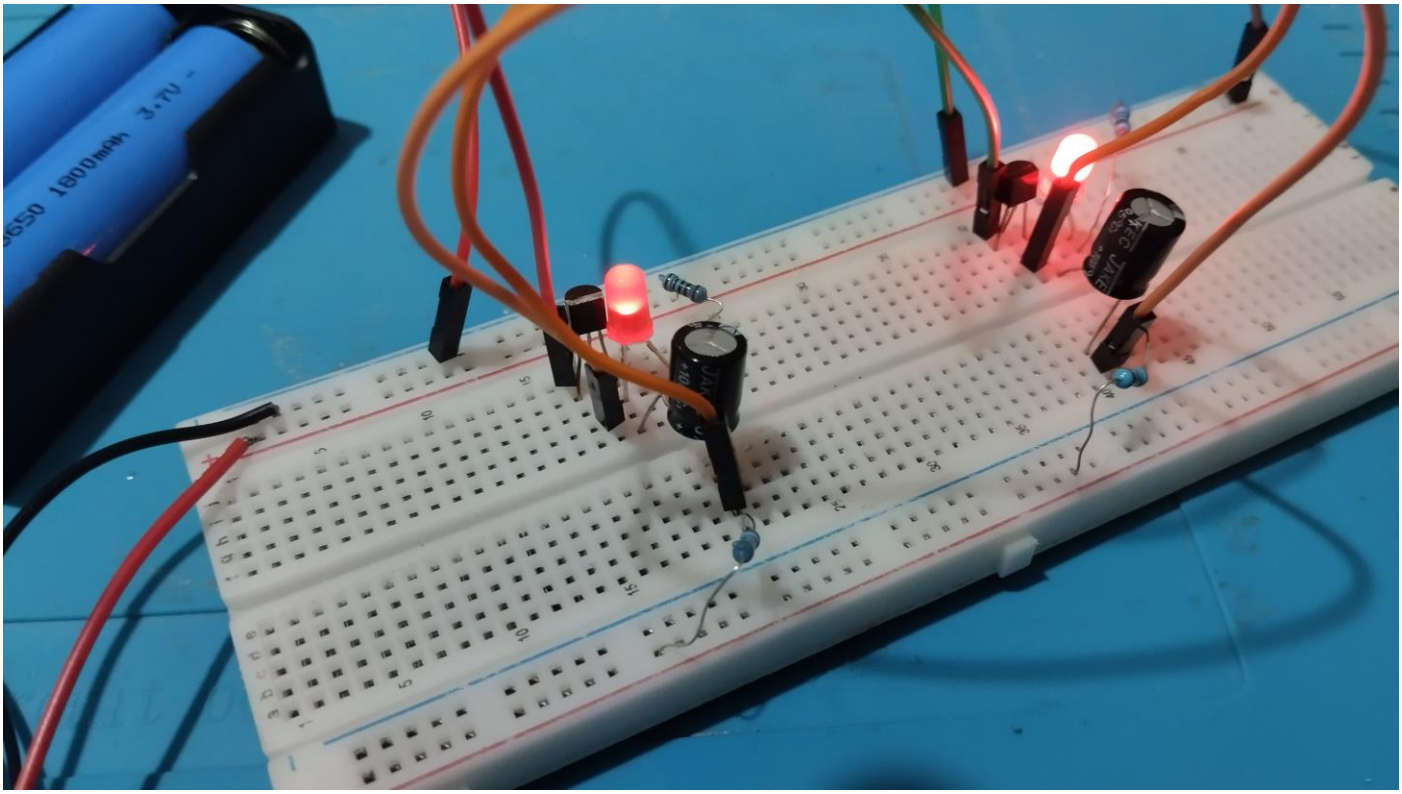
1900mAh 3.7V